NPP Containment Vent Protection an Examination of the Effects and Mitigation Strategies to Manage Decay Heat Deposition on Dry Filtration Vent Systems

33rd International Nuclear Air Cleaning Conference

Union Station Hotel, St Louis, MO
June 22-24, 2014

Adam Swain, Chris Chadwick
Porvair Filtration Group

World Class Filtration Solutions

Purpose Of The Paper And Presentation

To give focus to the particular aspect of decay heat deposition on dry filtration solutions in containment venting applications.

- To continue the debate
- To familiarise the industry with this particular aspect of the FCVS application
- To review the implications decay heat loading on mechanical equipment
- To illustrate the current somewhat different models for the consequences of LOCA specifically relating to decay heat

Mitigating a LOCA

A LOCA presents a complex problem which appears not to be fully understood.

It is reasonable to simplify FCVS applications in the following terms:

- An arduous set of process conditions (often in conflict with one another, for seemingly similar sites)
- A range of different operating philosophies

Establishing An Accurate Source Term

In order to begin to understand and indeed design a filtration system to deal with the consequences of a LOCA, an accurate source term must be derived, as it appears there is a range of different and sometimes conflicting requirements.

With a specific focus to decay heat we have a seen several different values quoted for this individual variable, which would have a significant effect on the overall size of otherwise similar equipment.

The effects of decay heat

- Total burdens experienced to date in the several applications we have been asked to look at have ranged from 2 kW to some hundreds of kW
- Must be distributed across the filter elements to a sustainable figure per unit area (preventing loss of the system) or be removed by another means
- Decay heat loading must be managed such that filter media/element integrity is maintained
- The potential presence of caesium hydroxide (which melts at 273 Celsius)

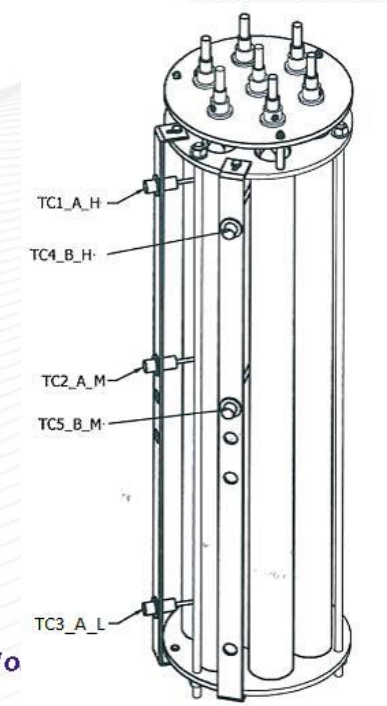

Effects of Heat Loading on Media Integrity

- High active surface area
- Small diameter fibres (1-30 microns)
- Relies upon sinter bonds for structural integrity
- Currently understood continuous operating temperature 370 ºC maximum in oxidising environment
- Higher in reducing environment depending on gas constituents

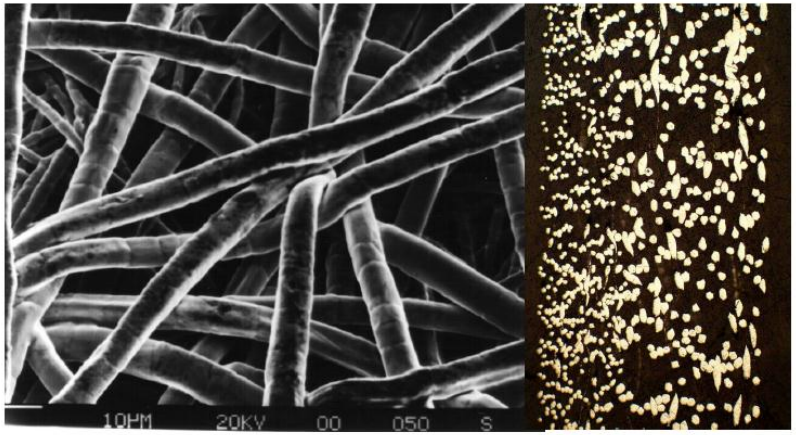

World Class Filtration Solutions

Tensile Test 1 (Ambient Calibration Test)

Test conditions

- Temperature: 20°C (68°F)
- Pressure: Ambient
- Samples tested: 4

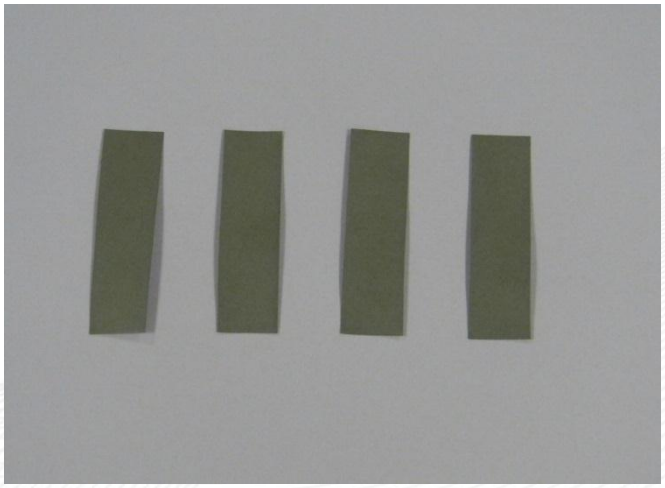

World Class Filtration Solutions

Tensile Test 2 (Post Heat Soak)

Test conditions

- Soak temperature : 500°C (932°F)
- Soak time: 72 hours
- Pressure: Ambient
- Test furnace fluid: Air
- Samples tested: 4

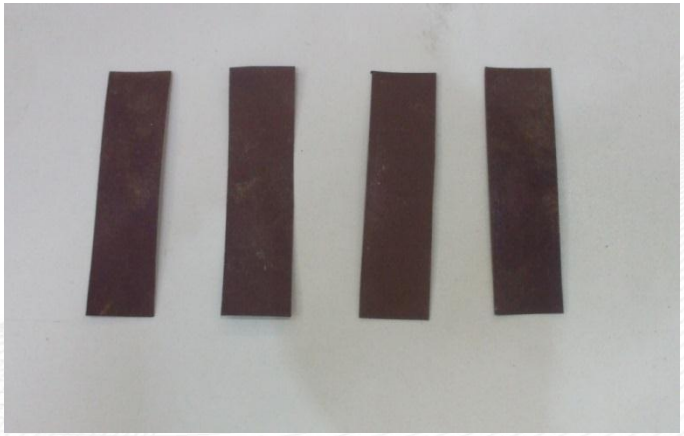

World Class Filtration Solutions

Tensile Test Results

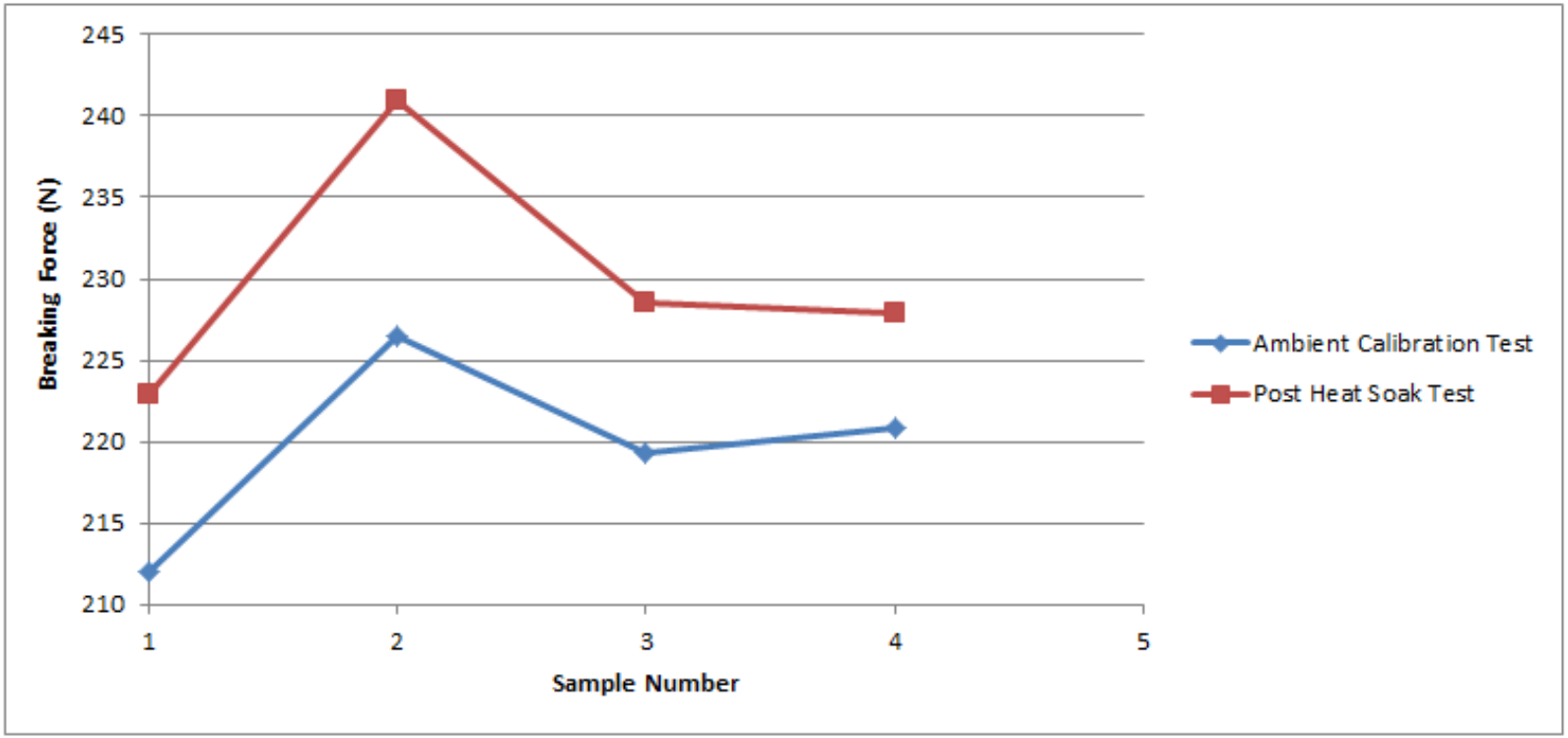

World Class Filtration Solutions

Efficiency Test 1 (Calibration Test)

Test conditions

- Temperature: 20°C (68°F)
- Pressure: ambient
- Face velocity: 3 cm/s
- Challenge: 0.3µm Ondina oil (DOP)

World Class Filtration Solutions

Efficiency Test 2 (Post Heat Soak Test)

Test conditions

- Temperature: 20°C (68°F)
- Pre test heat soak: 500°C (932°F)
- Pressure: ambient
- Face velocity: 3 cm/s
- Challenge: 0.3µm Ondina oil

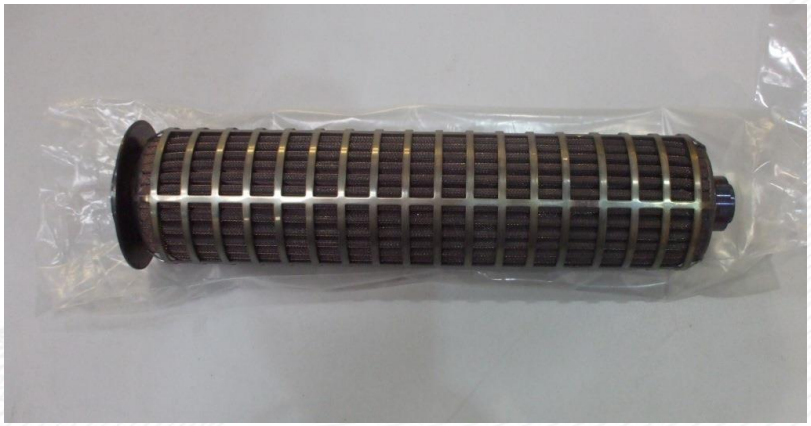

World Class Filtration Solutions

Efficiency Test Results

Test	Filtration Efficiency
1 Calibration test ambient	99.9924% at 0.3 µm
2 post heat soak test	99.9916% at 0.3 µm

- In both tests efficiencies of greater than 99.97% at 0.3µm were achieved
- No appreciable loss in efficiency was observed after the heat soak test (DF at 0.3 µm $>10^4$ in both cases)

World Class Filtration Solutions

Filter Assembly Heat Testing

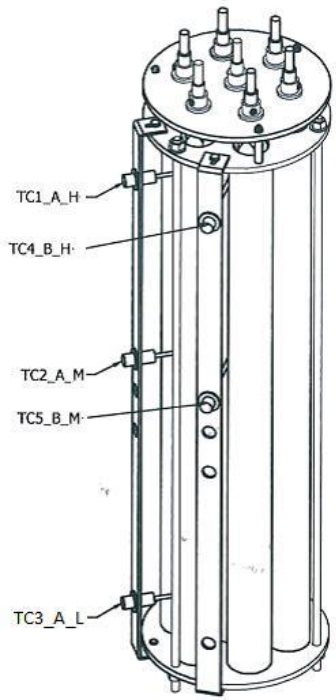

- 7 off filter elements were provided for the test program
- Heating rods inserted provide a variable power input (Watts) for a fixed unit area
- Pitched in a circular array with adjustable spacing
- Vertical and horizontal tests performed with and without a covering shroud
- A stabilised temperature plateau was reached for a fixed heat input

World Class Filtration Solutions

Filter Cores and Their Purpose

- Key structural component of a filter element
- Relatively open structure ranging from typically 40 to 70%
- To enable custom filtration solution to be produced without imposing high ΔP penalty
- A key factor influencing filter element selection
- Primarily two failure mechanisms

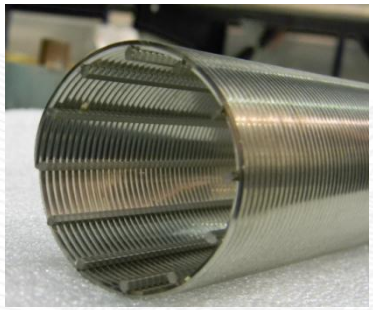

World Class Filtration Solutions

Why Is Core Collapse Important ?

- CV
- SRV
- Process Filters
- AGR BPBD Filters
- Metallic Radial Flow HEPA Filters

World Class Filtration Solutions

porvair filtration group

Original Calculated Core Collapse Values

Core Collapse Failure Mode	Core Collapse Pressure Psig (Barg)
Circumferential Collapse	605 (41.7)
Buckling	1582 (109.1)

Test Sample 1

Core Number	Core Collapse Pressure Psig (Barg)
1	440 (30.3)
2	400 (27.6)
3	420 (29)

World Class Filtration Solutions

Core Collapse Values

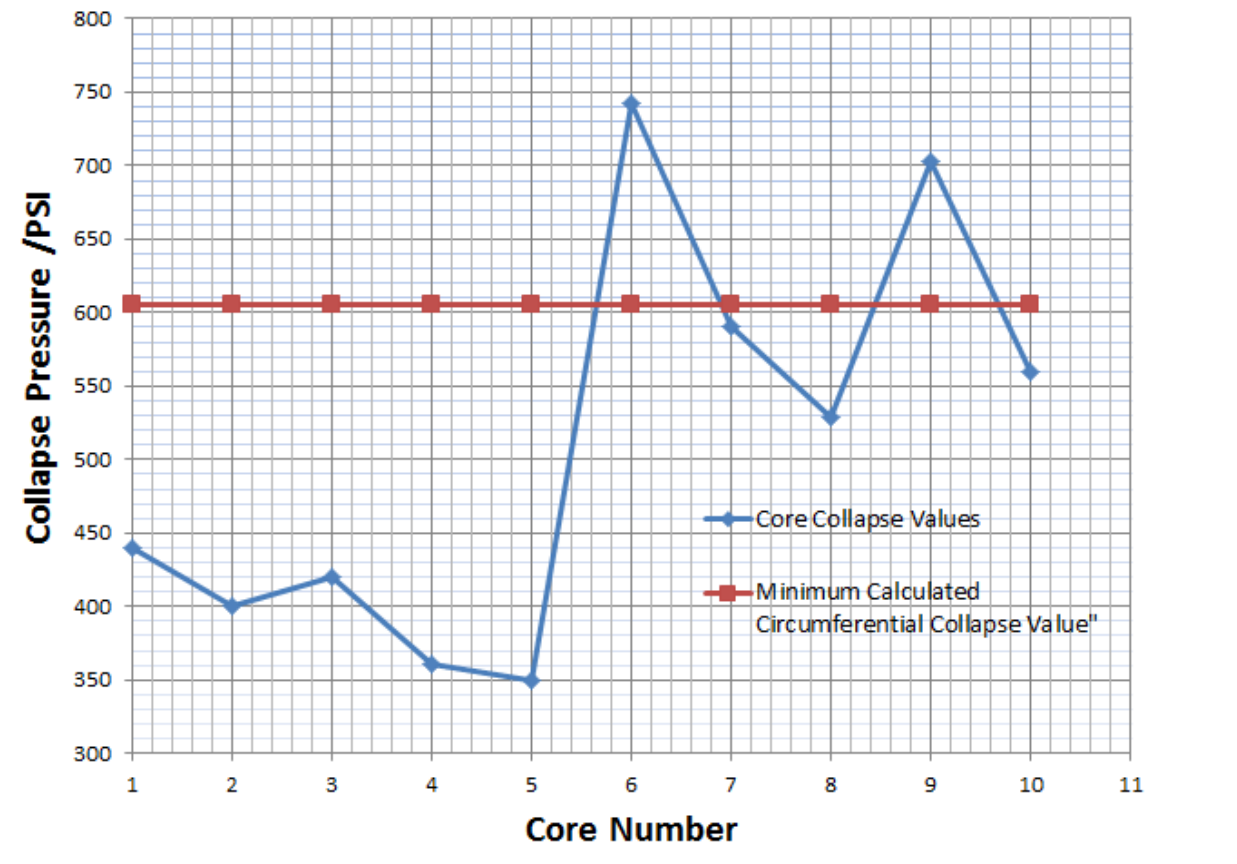

World Class Filtration Solutions

Observations

- Both efficiency and structural integrity were not significantly affected when a filter was exposed to elevated temperature for a fixed time period
- It appears that an additional factor of safety must be incorporated into the routine methodology for calculating core collapse
- Filter elements in systems where core collapse in extreme conditions is a concern, should also be supported by tested data to validate a “true” core collapse value

On-going Work

- We aim to complete additional heat soak efficiency and media tensile testing, at greater elevated temperatures
- Our test work continues with a view to determine a more reliable method of determining a filter cores true collapse value.
- We have a completed a phase of core collapse test at elevated temperature
- We are looking at performing further test programs on different configurations of cores and elevated temperatures

porvair filtration group

Table of HT Collapse Results

Core Number	Core Collapse Pressure Psig (Barg)	Out of Round Distinguishing Feature
1	405 (27.9)	Bottom half out of tolerance
8	407 (28.1)	All sections in tolerance
A	376 (25.9)	Top quarter in tolerance
B	440 (30.3)	Middle third out of tolerance
C	407 (28.1)	All sectors in tolerance
D	464 (32) no collapse	All sections in tolerance

Conclusions

- Decay heat is clearly a fundamental issue and not an after thought
- One potential worst case outcome of uncontrolled decay heat loading, is a huge temperature rise which may possibly be sufficient to cause the steel filters to melt
- At the very least temperature rises (to a much lower degree than mentioned above) could give rise to reductions in available tensile and yield strength, potentially resulting in collapse of filter elements/plates or rupture of the filter medium
- In addition to the other points raised in my presentation we hope that our joint presentations have cast a light on the importance of establishing a true and verifiable source term to enable filter companies to offer fully competent solutions to the filtration aspects of containment venting

porvair filtration group

Thank you for your time

are there any questions?

World Class Filtration Solutions